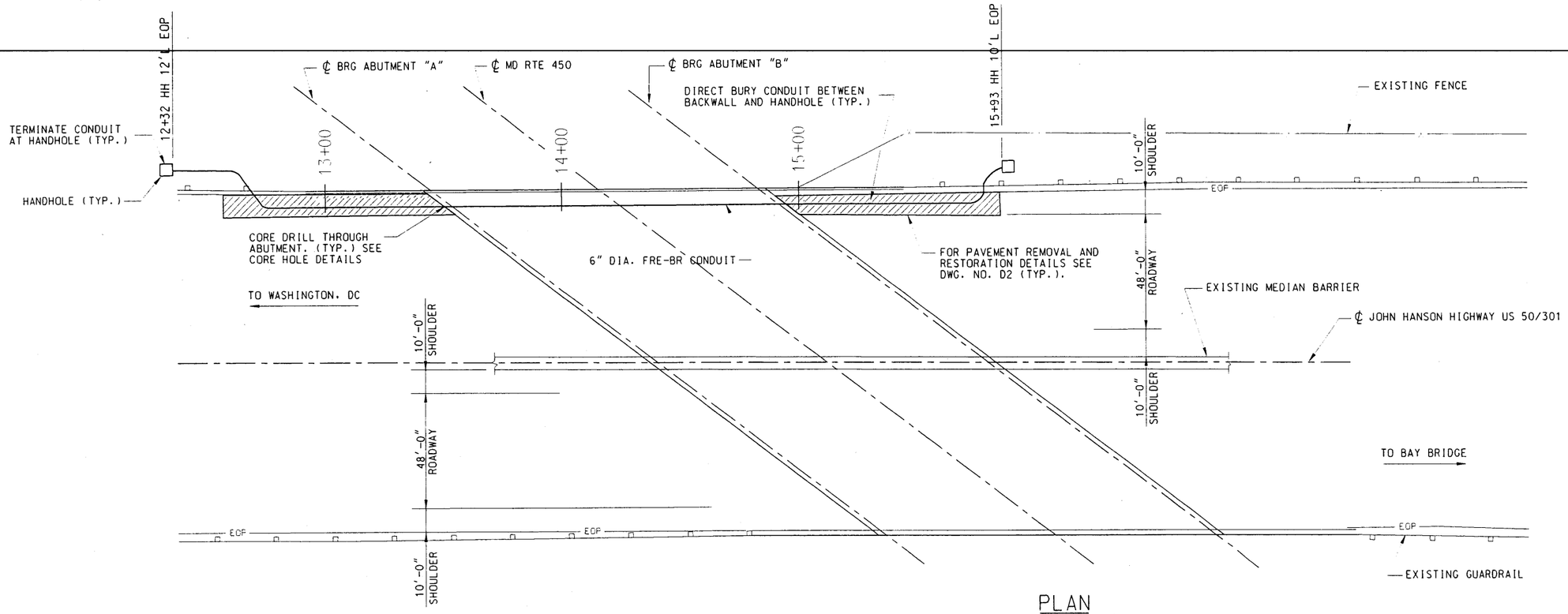

PLAN
SCALE 1" = 50'

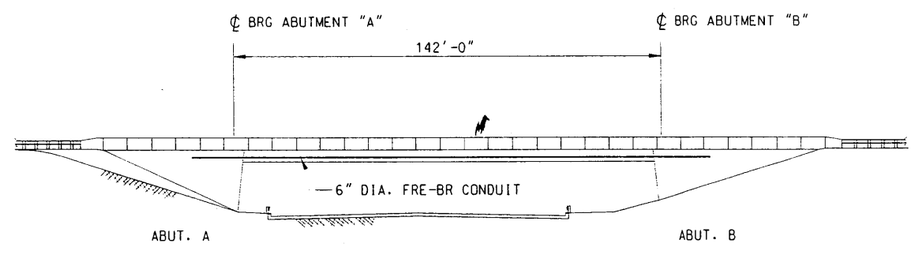

ELEVATION
SCALE 1" = 50'

CALL BEFORE YOU DIG
1-800-257-7777
48 HOURS NOTICE REQUIRED

Labor & Material Callout	
Unit	Quantity

net.work.Maryland

STATE OF MARYLAND, NETWORK MANAGEMENT SERVICES
DESIGN SEGMENT: US 50 /301, MD 70
US 50/301 OVER MD 450 (#2032)-PLAN & ELEVATION

PB 100 YEARS
CSC COMPUTER SCIENCE CORPORATION

Project Number	
Engineer	S. WITTE
Drawn By	B. OLESON
APRIL 12, 2001	

Revisions

DATE	DESCRIPTION	BY

Drawing Type	Drawing Number
S	5 of 31

5a\netmd\annapolis_bridges\2032\2-2032-p&e.dgn

User: $User$
Time: 13:52:15
Date: 7/5/01
Filename: h:\projec

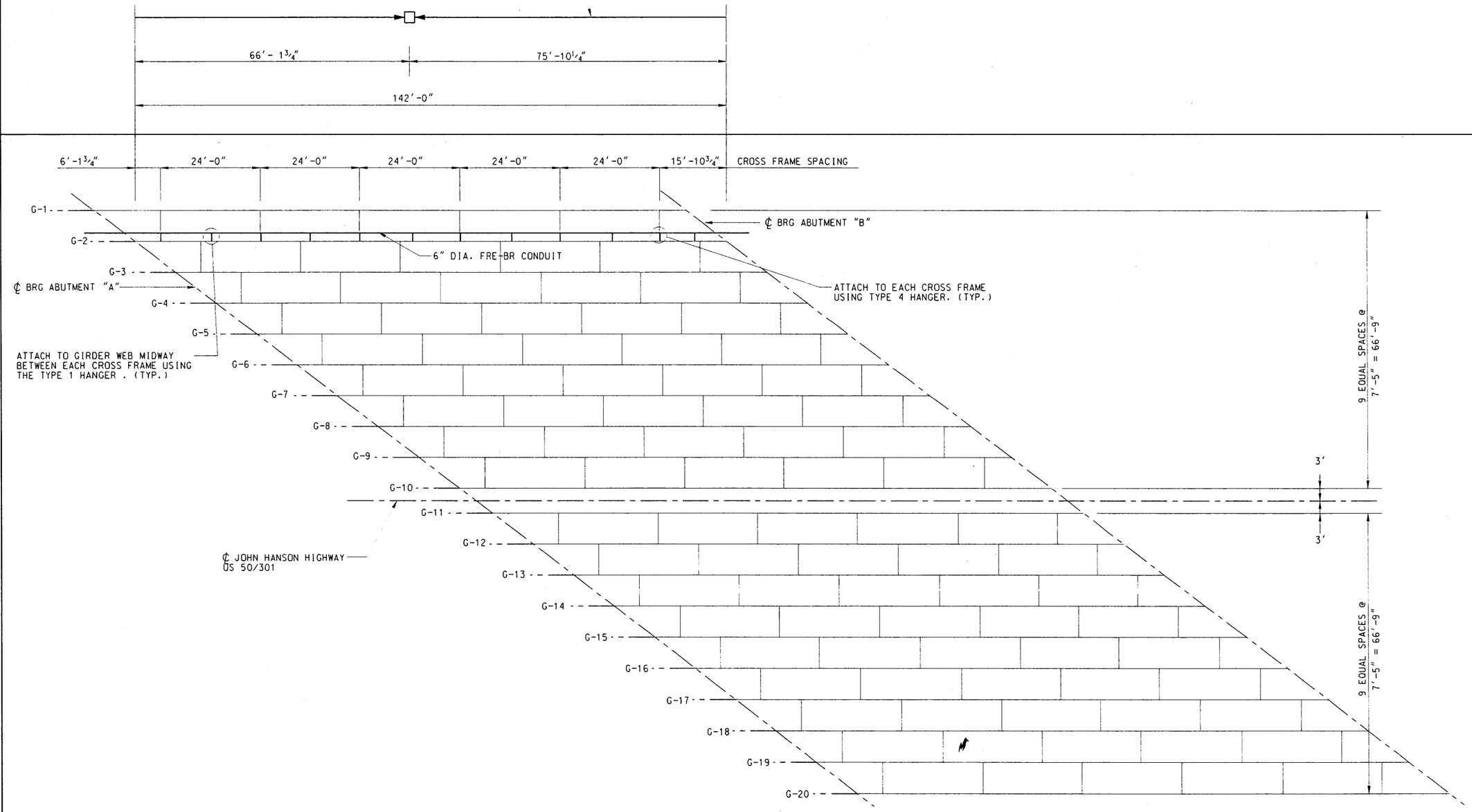

FRAMING PLAN

SCALE 1" = 25'

CALL BEFORE YOU DIG
1-800-257-7777
48 HOURS NOTICE
REQUIRED

Labor & Material Callout	
Unit	Quantity

net.work.Maryland

STATE OF MARYLAND, NETWORK MANAGEMENT SERVICES
DESIGN SEGMENT: US 50 /301, MD 70
US 50\301 OVER MD 450 (#2032)– FRAMING PLAN

PB 100 YEARS CSC COMPUTER SCIENCE CORPORATION

Project Number
Engineer
S. WITTE
Drawn By
B. OLESON
APRIL 12, 2001
Revisions

DATE	DESCRIPTION	BY

Drawing Type	Drawing Number
S	6 of 31

User: $User$
Time: 13:28:50
Date: 7/5/01
Filename: h:\projec .5a\netmd\annapolis_bridges\2032\3-2032-frame.dgn

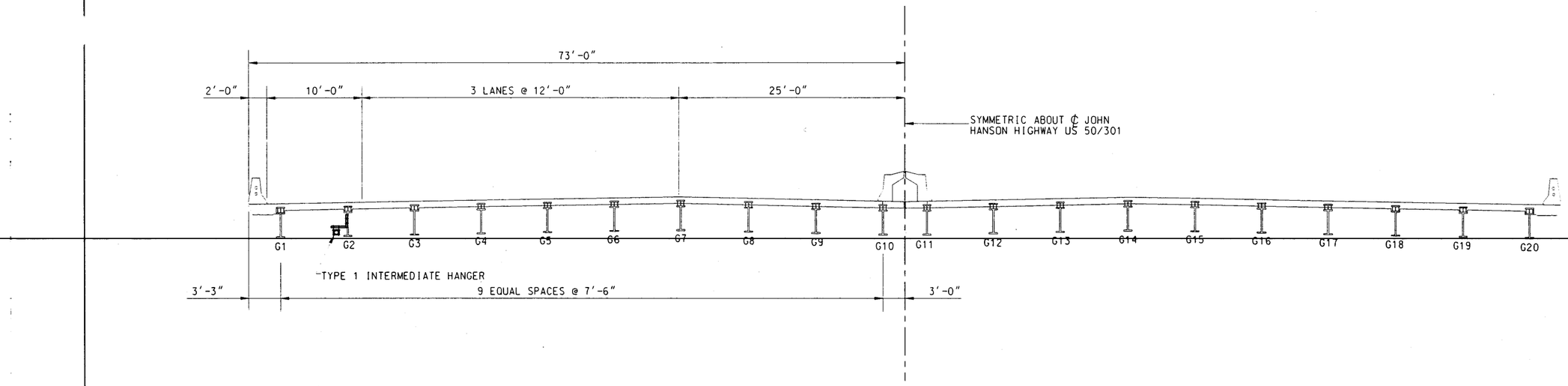

TYPICAL SECTION BETWEEN CROSS FRAMES

NOT TO SCALE

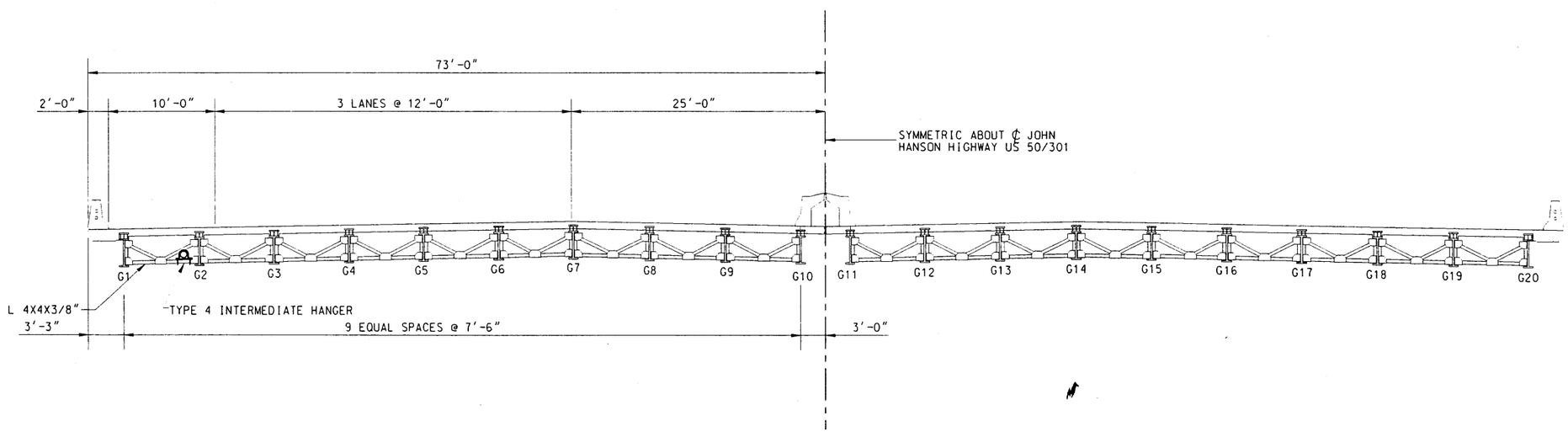

TYPICAL SECTION AT INTERMEDIATE CROSS FRAME

NOT TO SCALE

CALL BEFORE YOU DIG
1-800-257-7777
48 HOURS NOTICE
REQUIRED

Labor & Material Callout	
Unit	Quantity

net.work.Maryland

STATE OF MARYLAND, NETWORK MANAGEMENT SERVICES
DESIGN SEGMENT: US 50 /301, MD 70
US 50\301 OVER MD 450 (#2032)- TYPICAL SECTIONS

PB 100 YEARS

CSC COMPUTER SCIENCE CORPORATION

Project Number
Engineer
S. WITTE
Drawn By
B. OLESON
APRIL 12, 2001
Revisions

DATE	DESCRIPTION	BY

Drawing Type	Drawing Number
S	7 of 31

.5a\netmd\annapolis_bridges\2032\4-2032-typsect.dgn

User: $User$
Time: 13:28:58
Date: 7/5/01
Filename: h:\proje